PASS & SEYMOUR®
Stainless Steel
One & Two Gang Wall Plates

SS1, SS2, SS8, SS82, SS26, SS262, SS13, SS23, SS7, SS72, SS720

Our most corrosion-resistant metal wall plates.

These brushed-finish wall plates are made with .032" Type 302/304 stainless steel. This alloy is nonmagnetic and contains 18 percent chromium and 8 percent nickel for superior corrosion resistance. As a result, these plates will endure in corrosive atmospheres — and withstand abuse in any commercial application.

FEATURES & BENEFITS

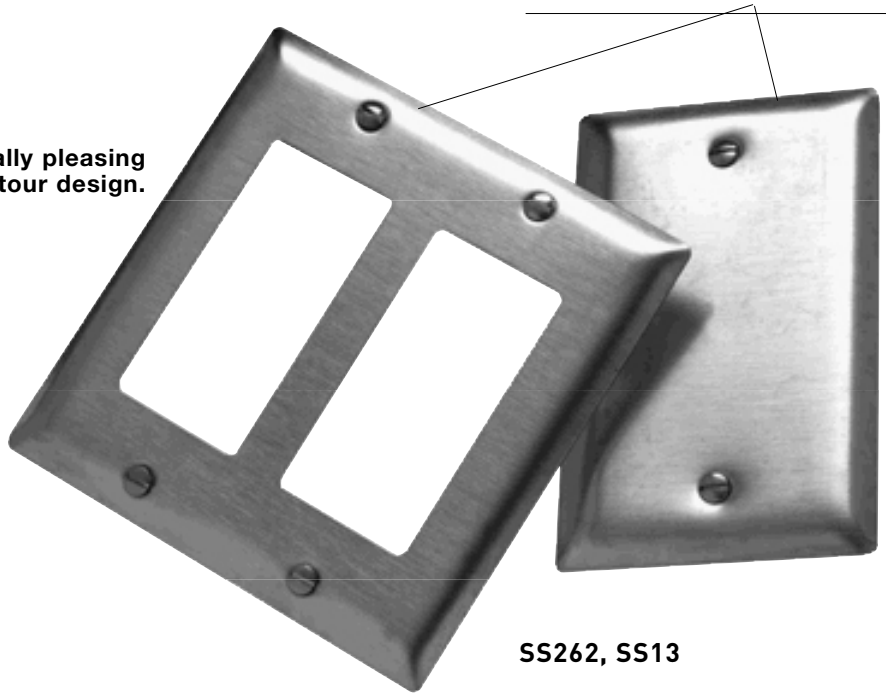

Constructed of .032 inch thick Type 302/304 brushed stainless steel.

Aesthetically pleasing contour design.

Packaged in protective film, with finish-matching screws.

SS262, SS13

FIELD USES/VERTICAL MARKETS

- Industrial
- Retail
- Health Care
- Office
- Education
- Hospitality/Lodging
- Institutional
- Multiple Dwelling

PASS & SEYMOUR®
Stainless Steel
One & Two Gang Wall Plates

Ordering Information

Description	Catalog Number	Description	Catalog Number
Stainless Steel Toggle Switch Openings			
One Gang	SS1	Two Gang	SS2
Stainless Steel Duplex Receptacle Openings			
One Gang	SS8	Two Gang	SS82
Stainless Steel Decorator Openings			
One Gang	SS26	Two Gang	SS262
Stainless Steel Blank Plates — Box Mounted			
One Gang	SS13	Two Gang	SS23
Stainless Steel Single Receptacle Openings			
One Gang	SS7	Two Gang	SS72
Stainless Steel Power Outlet Receptacle Opening			
One Gang	SS720		

Custom painted wall plates are available in the following colors. Add suffix to the part number.

COLOR	SUFFIX
Orange	ORG
Green	GRN
Gray	GRY
Yellow	YFI
Glossy Black	GBK
Brown	BRO
White	WHT
Primer	PRI
Red	RED
Pink	PNK
Flat Black	FBK
Ivory	IVY
Light Almond	LTA
Blue	MBL

All paint finishes are gloss, except primer and flat black. Only available on stainless steel and aluminum plate material.

For more information on these and other P&S products refer to our Product Guide or visit our web site.

PASS & SEYMOUR
Stainless Steel
One & Two Gang Wall Plates

Technical Specifications

3rd Party Compliance

UL Listed, Standard UL514, Cover Plates for Flush Mounted Wiring Devices.
CSA Certified.

Performance

Environmental	Corrosion-Resistant

Materials

Plate Material	.032" 302/304 Stainless Steel
Plate Finish	Brushed
Screws	302/304 Stainless Steel

Warranty

1 Year

Country of Origin

USA

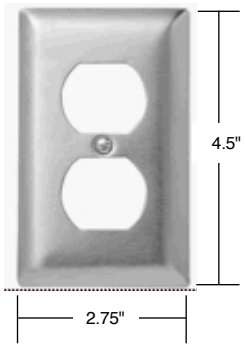

Dimensions for One Gang

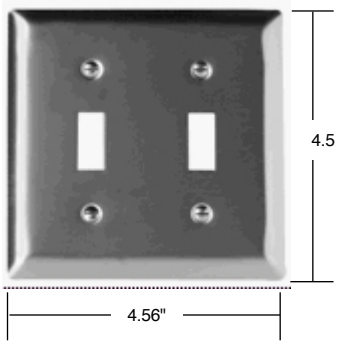

Dimensions for Two Gang

COMPLEMENTARY DEVICES & ACCESSORIES

TURNLOK® LOCKING DEVICES

- Heavy-Duty Receptacles
- Heavy-Duty Flanged Inlets & Outlets

GROUND CONTINUITY MONITORING (GCM)

- Extra-Hard Use Straight Blade
- Heavy-Duty Turnlok®

STRAIGHT BLADE PLUGS & CONNECTORS

- Extra-Hard Use
- Heavy-Duty MaxGrip® M³

SPD & ISOLATED GROUND DEVICES

- Construction Grade Isolated Ground
- Heavy-Duty Turnlok® Isolated Ground
- Heavy-Duty Isolated Ground SPD
- Heavy-Duty SPD
- Construction Grade SPD

IEC 309 INDUSTRIAL PRODUCTS

- Fusible & Non-Fusible Mechanical Interlocks
- Fusible & Non-Fusible Safety Switches
- Pin & Sleeve Devices

ALSO AVAILABLE...

- Lighting Controls
- USB Charging Devices
- Hospital Grade Devices
- PlugTail Devices
- GFCIs
- SPD Isolated Ground Devices
- Ground Continuity Monitoring Devices
- Straight Blade Plugs & Connectors
- Turnlok® Locking Devices
- IEC 309 Industrial Products
- Flexcor® Wire Mesh Grips

Electrical Wiring Systems

P.O. Box 4822
Syracuse, NY 13221-4822
Phone: 1.800.776.4035
www.legrand.us/passandseymour

570 Applewood Crescent
Vaughan, Ontario L4K 4B4
Phone:905.738.9195
www.legrand.ca

SF2502R2 – Updated January 2014 – For latest specs visit www.legrand.us/passandseymour

© Copyright 2014 All Rights Reserved Legrand EWS/CGXTP

PASS & SEYMOUR®
Stainless Steel
One & Two Gang Wall Plates

SS1, SS2, SS8, SS82, SS26, SS262, SS13, SS23, SS7, SS72, SS720

Our most corrosion-resistant metal wall plates.

These brushed-finish wall plates are made with .032" Type 302/304 stainless steel. This alloy is nonmagnetic and contains 18 percent chromium and 8 percent nickel for superior corrosion resistance. As a result, these plates will endure in corrosive atmospheres — and withstand abuse in any commercial application.

FEATURES & BENEFITS

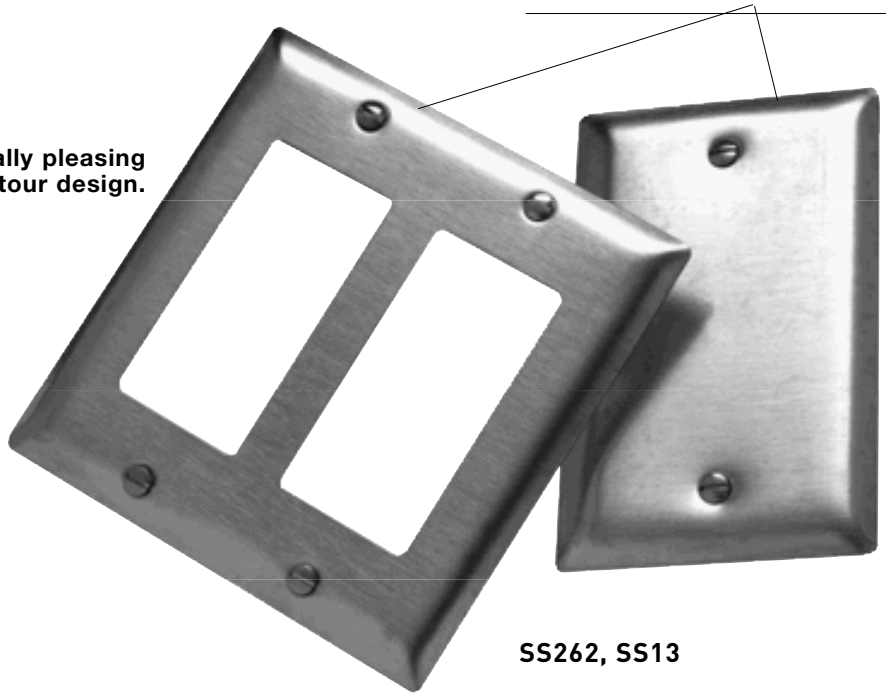

Constructed of .032 inch thick Type 302/304 brushed stainless steel.

Aesthetically pleasing contour design.

Packaged in protective film, with finish-matching screws.

SS262, SS13

FIELD USES/VERTICAL MARKETS

- Industrial
- Retail
- Health Care
- Office
- Education
- Hospitality/Lodging
- Institutional
- Multiple Dwelling

PASS & SEYMOUR®
Stainless Steel
One & Two Gang Wall Plates

Ordering Information

Description	Catalog Number	Description	Catalog Number
Stainless Steel Toggle Switch Openings			
One Gang	SS1	Two Gang	SS2
Stainless Steel Duplex Receptacle Openings			
One Gang	SS8	Two Gang	SS82
Stainless Steel Decorator Openings			
One Gang	SS26	Two Gang	SS262
Stainless Steel Blank Plates — Box Mounted			
One Gang	SS13	Two Gang	SS23
Stainless Steel Single Receptacle Openings			
One Gang	SS7	Two Gang	SS72
Stainless Steel Power Outlet Receptacle Opening			
One Gang	SS720		

Custom painted wall plates are available in the following colors. Add suffix to the part number.

COLOR	SUFFIX
Orange	ORG
Green	GRN
Gray	GRY
Yellow	YFI
Glossy Black	GBK
Brown	BRO
White	WHT
Primer	PRI
Red	RED
Pink	PNK
Flat Black	FBK
Ivory	IVY
Light Almond	LTA
Blue	MBL

All paint finishes are gloss, except primer and flat black. Only available on stainless steel and aluminum plate material.

For more information on these and other P&S products refer to our Product Guide or visit our web site.

PASS & SEYMOUR
Stainless Steel
One & Two Gang Wall Plates

Technical Specifications

3rd Party Compliance

UL Listed, Standard UL514, Cover Plates for Flush Mounted Wiring Devices.
CSA Certified.

Performance

Environmental	Corrosion-Resistant

Materials

Plate Material	.032" 302/304 Stainless Steel
Plate Finish	Brushed
Screws	302/304 Stainless Steel

Warranty

1 Year

Country of Origin

USA

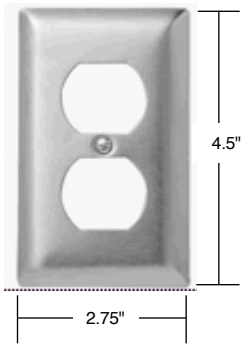

Dimensions for One Gang

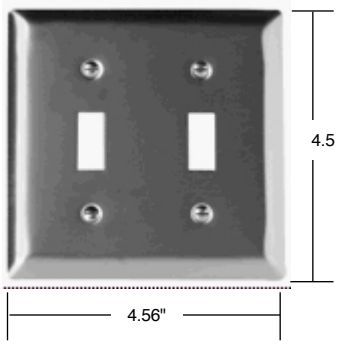

Dimensions for Two Gang

COMPLEMENTARY DEVICES & ACCESSORIES

TURNLOK® LOCKING DEVICES

- Heavy-Duty Receptacles
- Heavy-Duty Flanged Inlets & Outlets

GROUND CONTINUITY MONITORING (GCM)

- Extra-Hard Use Straight Blade
- Heavy-Duty Turnlok®

STRAIGHT BLADE PLUGS & CONNECTORS

- Extra-Hard Use
- Heavy-Duty MaxGrip® M³

SPD & ISOLATED GROUND DEVICES

- Construction Grade Isolated Ground
- Heavy-Duty Turnlok® Isolated Ground
- Heavy-Duty Isolated Ground SPD
- Heavy-Duty SPD
- Construction Grade SPD

IEC 309 INDUSTRIAL PRODUCTS

- Fusible & Non-Fusible Mechanical Interlocks
- Fusible & Non-Fusible Safety Switches
- Pin & Sleeve Devices

ALSO AVAILABLE...

- Lighting Controls
- USB Charging Devices
- Hospital Grade Devices
- PlugTail Devices
- GFCIs
- SPD Isolated Ground Devices
- Ground Continuity Monitoring Devices
- Straight Blade Plugs & Connectors
- Turnlok® Locking Devices
- IEC 309 Industrial Products
- Flexcor® Wire Mesh Grips

Electrical Wiring Systems

P.O. Box 4822
Syracuse, NY 13221-4822
Phone: 1.800.776.4035
www.legrand.us/passandseymour

570 Applewood Crescent
Vaughan, Ontario L4K 4B4
Phone:905.738.9195
www.legrand.ca

SF2502R2 – Updated January 2014 – For latest specs visit www.legrand.us/passandseymour

© Copyright 2014 All Rights Reserved Legrand EWS/CGXTP