Commercial specification grade switches

Project Name:	Prepared By:
Project Number:	Date:
Catalog Number:	Type:

CSB115W

CSB415W

CS315W

CS420W

Description

15A & 20A, 120/277V/AC
Single Pole, Double Pole, 3-Way, 4-Way

Design features

- Patent pending spring cup toggle design for robust actuation
- Terminals accept up to #10 AWG solid or stranded
- 120/277V/AC rating ideal for fluorescent lighting fixtures typical in commercial applications
- Terminal screws backed out and ready for wiring
- Tri-combo head mounting and terminal screws ease installation
- Tapered lead-in slots on back wiring holes assist in gathering stranded wires for faster, more secure connections (CSB only)

Table 1. Back & Side Wire

Catalog No.	Description	Amps	Volts	Color Suffix
☐ CSB115__	Single Pole Switch	15	120/277	B, GY, LA, V, W
☐ CSB215__	Double Pole Switch	15	120/277	B, GY, LA, V, W
☐ CSB315__	3-Way Switch	15	120/277	B, GY, LA, V, W
☐ CSB415__	4-Way Switch	15	120/277	B, GY, LA, V, W
☐ CSB120__	Single Pole Switch	20	120/277	B, GY, LA, V, W
☐ CSB220__	Double Pole Switch	20	120/277	B, GY, LA, V, W
☐ CSB320__	3-Way Switch	20	120/277	B, GY, LA, V, W
☐ CSB420__	4-Way Switch	20	120/277	B, GY, V, W

Table 2. Side Wire

Catalog No.	Description	Amps	Volts	Color Suffix
☐ CS115__	Single Pole Switch	15	120/277	A, B, BK, GY, LA, V, W
☐ CS215__	Double Pole Switch	15	120/277	B, BK, GY, LA, V, W
☐ CS315__	3-Way Switch	15	120/277	A, B, BK, GY, LA, V, W
☐ CS415__	4-Way Switch	15	120/277	B, GY, LA, V, W
☐ CS120__	Single Pole Switch	20	120/277	A, B, BK, GY, LA, V, W
☐ CS220__	Doubl Pole Switch	20	120/277	B, BK, GY, LA, V, W
☐ CS320__	3-Way Switch	20	120/277	B, BK, GY, LA, V, W
☐ CS420__	4-Way Switch	20	120/277	B, GY, LA, V, W

Compliances, specifications and availability are subject to change without notice.

EATON
Powering Business Worldwide

Project Name:	Prepared By:
Project Number:	Date:
Catalog Number:	Type:

Applications

Commercial specification grade switches are designed to fill the need for high quality in low-abuse commercial areas.

Table 3. Specifications

Catalog No.	CSB Series 115/120, 215/220, 315/320	CS Series 115/120, 215/220, 315/320	CSB 415/420, CS 415/420
	Commercial 15A and 20A 120/277V Toggle Switches	Commercial 15A and 20A 120/277V Toggle Switches	Commercial 15A and 20A 120/277V Toggle Switches
Wiring Type	Back & side wire	Side wire	Back & side wire (CSB) side wire (CS)
Testing & Code Compliance	• cULus Listed to UL 20, file no. E18704 • UL Verified to Federal Spec.WC-896G • File No. 111 • NOM Certified	• cULus Listed to UL 20, file no. E18704 • UL Verified to Federal Spec WC-896G • File No. 111 • NOM Certified	• cULus Listed to UL 20, file no. E18704 • UL Verified to Federal Spec WS-896-F • File No. 111 • NOM Certified
Environmental Specifications	**Flammability:** Meets UL94 requirements; V0 rated **Temperature Rating:** -20°C to 60°C (-4°F to 140°F)	**Flammability:** Meets UL94 requirements; V0 rated **Temperature Rating:** -20°C to 60°C (-4°F to 140°F)	**Flammability:** Meets UL94 requirements; V2 rated **Temperature Rating:** -20°C to 60°C (-4°F to 140°F)
Electrical Specifications	**Dielectric Voltage:** Withstands 1500V per UL 20 **Current Interrupting:** Yes, at full-rated current **Temperature Rise:** Max. 30°C (86°F) after 100 cycles of overload and 50,000 cycles of endurance testing	**Dielectric Voltage:** Withstands 1500V per UL 20 **Current Interrupting:** Yes, at full-rated current **Temperature Rise:** Max. 30°C (86°F) after 100 cycles of overload and 50,000 cycles of endurance testing	**Dielectric Voltage:** Withstands 1500V per UL 20 **Current Interrupting:** Yes, at full-rated current **Temperature Rise:** Max. 30°C (86°F) after 100 cycles of overload and 30,000 cycles of endurance testing
Mechanical Specifications	**Terminal Accommodation:** #14 - 10 AWG **Voltage Ratings:** Permanently marked on device **Horsepower Ratings:** Rated for motor loads per UL20: 15A: @ 120V/AC = 1/2 HP, @ 240V/AC = 2 HP; @ 277V/AC = 2 HP, Max. amps 12A. 20A: @ 120V/AC = 1 HP, @ 240V/AC = 2 HP; @ 277V/AC = 2 HP, Max. amps 16A	**Terminal Accommodation:** #14 - 10 AWG **Voltage Ratings:** Permanently marked on device **Horsepower Ratings:** Rated for motor loads per UL20: 15A: @ 120V/AC = 1/2 HP, @ 240V/AC = 2 HP; @ 277V/AC = 2 HP, Max. amps 12A. 20A: @ 120V/AC = 1 HP, @ 240V/AC = 2 HP; @ 277V/AC = 2 HP, Max. amps 16A	**Terminal Accommodation:** #14 - 10 AWG **Voltage Ratings:** Permanently marked on device **Horsepower Ratings:** Rated for motor loads per UL20: 15A: @ 120V/AC = 1/2 HP, @ 240V/AC = 2 HP; @ 277V/AC = 2 HP, Max. amps 12A. 20A: @ 120V/AC = 1 HP, @ 240V/AC = 2 HP; @ 277V/AC = 2 HP, Max. amps 16A

Table 4. Materials

Catalog No.	CSB Series 115/120, 215/220, 315/320	CS Series 115/120, 215/220, 315/320	CSB 415/420, CS 415/420
	Commercial 15A and 20A 120/277V Toggle Switches	Commercial 15A and 20A 120/277V Toggle Switches	Commercial 15A and 20A 120/277V Toggle Switches
Toggle	Nylon	Nylon	Nylon
Top Housing	PVC	PVC	Polycarbonate
Bottom Housing	PVC	PVC	Polycarbonate
Strap	0.045" thick steel, zinc plated	0.045" thick galvanized steel, nickel plated	0.050" thick galvanized steel
Auto Ground Clip	N/A	N/A	0.015" thick brass
Terminals	0.031" thick brass	0.031" thick high performance copper alloy	0.030" thick brass
Terminal Screws	#8-32 steel, brass plated or zinc plated	#8-32 steel, brass plated or zinc plated	#10-32 brass, black
Ground Screw	#8-32 steel, zinc plated, green	#8-32 steel, zinc plated, green	#8-32 steel, zinc plated, green
Back wire Clamp	Brass	N/A	0.070" plated steel
Contacts	Silver alloy	Silver alloy	Silver alloy
Moveable Contact Arm	Brass	Brass	0.030" thick brass

Compliances, specifications and availability are subject to change without notice.

Project Name:	Prepared By:
Project Number:	Date:
Catalog Number:	Type:

Table 5 Color Ordering Information

For ordering devices, include Catalog No. followed by the Color Suffix: A (Almond) B (Brown), BK (Black), GY (Gray), LA (Light Almond), V (Ivory), W (White)

A	B	BK	GY	LA	V	W
(Almond)	(Brown)	(Black)	(Gray)	(Light Almond)	(Ivory)	(White)

Product Dimensions

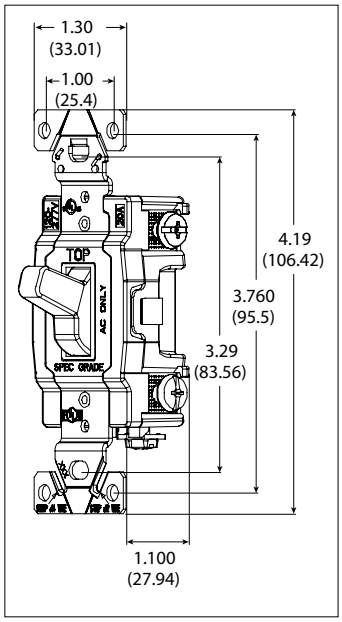

Figure 1. CS/CSB 415, 420

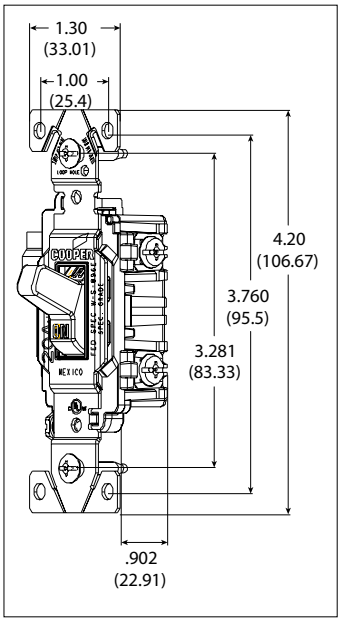

Figure 2. CS/CSB 115, 120, 315, 320

Project Name:	Prepared By:
Project Number:	Date:
Catalog Number:	Type:

Certifications & compliances

Catalog no.	NAFTA	cULus	UL	NOM 426
CSB115	•	•	•	•
CSB215	•	•	•	•
CSB315	•	•	•	•
CSB415		•	•	•
CSB120	•	•	•	•
CSB220	•	•	•	•
CS320	•	•	•	•
CSB420		•	•	•
CS115	•	•	•	•
CS215	•	•	•	•
CS315	•	•	•	•
CS415		•	•	•
CS120	•	•	•	•
CS220	•	•	•	•
CS320	•	•	•	•
CS420		•	•	•

KEY: NAFTA cULus UL NOM

Compliances, specifications and availability are subject to change without notice.

Electrical Sector
203 Cooper Circle
Peachtree City, GA 30269
United States
Eaton.com
Eaton.com/arrowhart

Electrical Sector
Canada Operations
5925 McLaughlin Road
Mississauga, Ontario, L5R 1B8
Canada
EatonCanada.ca
Eaton.com/arrowhart

Electrical Sector
Mexico Operations
Carr. Tlalnepantla -
Cuautitlán Km 17.8 s/n
Col. Villa Jardín esq.
Cerrada 8 de Mayo
Cuautitlán, México CP 54800
México
Eaton.mx
Eaton.com/arrowhart

Powering Business Worldwide

Eaton
1000 Eaton Boulevard
Cleveland, OH 44122
United States
Eaton.com

© 2017 Eaton
All Rights Reserved
Printed in USA
Publication No. TD620021EN
June 2017

Eaton is a registered trademark.

All other trademarks are property of their respective owners.

Commercial specification grade switches

Project Name:	Prepared By:
Project Number:	Date:
Catalog Number:	Type:

CSB115W

CSB415W

CS315W

CS420W

Description

15A & 20A, 120/277V/AC
Single Pole, Double Pole, 3-Way, 4-Way

Design features

- Patent pending spring cup toggle design for robust actuation
- Terminals accept up to #10 AWG solid or stranded
- 120/277V/AC rating ideal for fluorescent lighting fixtures typical in commercial applications
- Terminal screws backed out and ready for wiring
- Tri-combo head mounting and terminal screws ease installation
- Tapered lead-in slots on back wiring holes assist in gathering stranded wires for faster, more secure connections (CSB only)

Table 1. Back & Side Wire

Catalog No.	Description	Amps	Volts	Color Suffix
☐ CSB115__	Single Pole Switch	15	120/277	B, GY, LA, V, W
☐ CSB215__	Double Pole Switch	15	120/277	B, GY, LA, V, W
☐ CSB315__	3-Way Switch	15	120/277	B, GY, LA, V, W
☐ CSB415__	4-Way Switch	15	120/277	B, GY, LA, V, W
☐ CSB120__	Single Pole Switch	20	120/277	B, GY, LA, V, W
☐ CSB220__	Double Pole Switch	20	120/277	B, GY, LA, V, W
☐ CSB320__	3-Way Switch	20	120/277	B, GY, LA, V, W
☐ CSB420__	4-Way Switch	20	120/277	B, GY, V, W

Table 2. Side Wire

Catalog No.	Description	Amps	Volts	Color Suffix
☐ CS115__	Single Pole Switch	15	120/277	A, B, BK, GY, LA, V, W
☐ CS215__	Double Pole Switch	15	120/277	B, BK, GY, LA, V, W
☐ CS315__	3-Way Switch	15	120/277	A, B, BK, GY, LA, V, W
☐ CS415__	4-Way Switch	15	120/277	B, GY, LA, V, W
☐ CS120__	Single Pole Switch	20	120/277	A, B, BK, GY, LA, V, W
☐ CS220__	Doubl Pole Switch	20	120/277	B, BK, GY, LA, V, W
☐ CS320__	3-Way Switch	20	120/277	B, BK, GY, LA, V, W
☐ CS420__	4-Way Switch	20	120/277	B, GY, LA, V, W

Compliances, specifications and availability are subject to change without notice.

EATON
Powering Business Worldwide

Project Name:	Prepared By:
Project Number:	Date:
Catalog Number:	Type:

Applications

Commercial specification grade switches are designed to fill the need for high quality in low-abuse commercial areas.

Table 3. Specifications

Catalog No.	CSB Series 115/120, 215/220, 315/320	CS Series 115/120, 215/220, 315/320	CSB 415/420, CS 415/420
	Commercial 15A and 20A 120/277V Toggle Switches	Commercial 15A and 20A 120/277V Toggle Switches	Commercial 15A and 20A 120/277V Toggle Switches
Wiring Type	Back & side wire	Side wire	Back & side wire (CSB) side wire (CS)
Testing & Code Compliance	• cULus Listed to UL 20, file no. E18704 • UL Verified to Federal Spec.WC-896G • File No. 111 • NOM Certified	• cULus Listed to UL 20, file no. E18704 • UL Verified to Federal Spec WC-896G • File No. 111 • NOM Certified	• cULus Listed to UL 20, file no. E18704 • UL Verified to Federal Spec WS-896-F • File No. 111 • NOM Certified
Environmental Specifications	**Flammability:** Meets UL94 requirements; V0 rated **Temperature Rating:** -20°C to 60°C (-4°F to 140°F)	**Flammability:** Meets UL94 requirements; V0 rated **Temperature Rating:** -20°C to 60°C (-4°F to 140°F)	**Flammability:** Meets UL94 requirements; V2 rated **Temperature Rating:** -20°C to 60°C (-4°F to 140°F)
Electrical Specifications	**Dielectric Voltage:** Withstands 1500V per UL 20 **Current Interrupting:** Yes, at full-rated current **Temperature Rise:** Max. 30°C (86°F) after 100 cycles of overload and 50,000 cycles of endurance testing	**Dielectric Voltage:** Withstands 1500V per UL 20 **Current Interrupting:** Yes, at full-rated current **Temperature Rise:** Max. 30°C (86°F) after 100 cycles of overload and 50,000 cycles of endurance testing	**Dielectric Voltage:** Withstands 1500V per UL 20 **Current Interrupting:** Yes, at full-rated current **Temperature Rise:** Max. 30°C (86°F) after 100 cycles of overload and 30,000 cycles of endurance testing
Mechanical Specifications	**Terminal Accommodation:** #14 - 10 AWG **Voltage Ratings:** Permanently marked on device **Horsepower Ratings:** Rated for motor loads per UL20: 15A: @ 120V/AC = 1/2 HP, @ 240V/AC = 2 HP; @ 277V/AC = 2 HP, Max. amps 12A. 20A: @ 120V/AC = 1 HP, @ 240V/AC = 2 HP; @ 277V/AC = 2 HP, Max. amps 16A	**Terminal Accommodation:** #14 - 10 AWG **Voltage Ratings:** Permanently marked on device **Horsepower Ratings:** Rated for motor loads per UL20: 15A: @ 120V/AC = 1/2 HP, @ 240V/AC = 2 HP; @ 277V/AC = 2 HP, Max. amps 12A. 20A: @ 120V/AC = 1 HP, @ 240V/AC = 2 HP; @ 277V/AC = 2 HP, Max. amps 16A	**Terminal Accommodation:** #14 - 10 AWG **Voltage Ratings:** Permanently marked on device **Horsepower Ratings:** Rated for motor loads per UL20: 15A: @ 120V/AC = 1/2 HP, @ 240V/AC = 2 HP; @ 277V/AC = 2 HP, Max. amps 12A. 20A: @ 120V/AC = 1 HP, @ 240V/AC = 2 HP; @ 277V/AC = 2 HP, Max. amps 16A

Table 4. Materials

Catalog No.	CSB Series 115/120, 215/220, 315/320	CS Series 115/120, 215/220, 315/320	CSB 415/420, CS 415/420
	Commercial 15A and 20A 120/277V Toggle Switches	Commercial 15A and 20A 120/277V Toggle Switches	Commercial 15A and 20A 120/277V Toggle Switches
Toggle	Nylon	Nylon	Nylon
Top Housing	PVC	PVC	Polycarbonate
Bottom Housing	PVC	PVC	Polycarbonate
Strap	0.045" thick steel, zinc plated	0.045" thick galvanized steel, nickel plated	0.050" thick galvanized steel
Auto Ground Clip	N/A	N/A	0.015" thick brass
Terminals	0.031" thick brass	0.031" thick high performance copper alloy	0.030" thick brass
Terminal Screws	#8-32 steel, brass plated or zinc plated	#8-32 steel, brass plated or zinc plated	#10-32 brass, black
Ground Screw	#8-32 steel, zinc plated, green	#8-32 steel, zinc plated, green	#8-32 steel, zinc plated, green
Back wire Clamp	Brass	N/A	0.070" plated steel
Contacts	Silver alloy	Silver alloy	Silver alloy
Moveable Contact Arm	Brass	Brass	0.030" thick brass

Compliances, specifications and availability are subject to change without notice.

Project Name:	Prepared By:
Project Number:	Date:
Catalog Number:	Type:

Table 5 Color Ordering Information

For ordering devices, include Catalog No. followed by the Color Suffix: A (Almond) B (Brown), BK (Black), GY (Gray), LA (Light Almond), V (Ivory), W (White)

A	B	BK	GY	LA	V	W
(Almond)	(Brown)	(Black)	(Gray)	(Light Almond)	(Ivory)	(White)

Product Dimensions

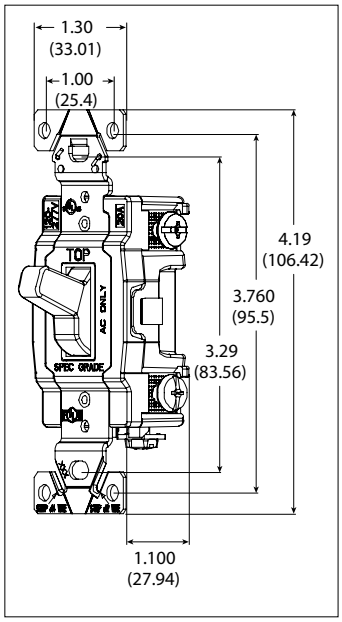

Figure 1. CS/CSB 415, 420

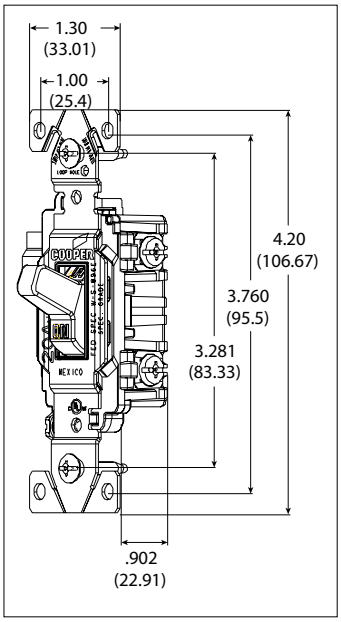

Figure 2. CS/CSB 115, 120, 315, 320

Project Name:	Prepared By:
Project Number:	Date:
Catalog Number:	Type:

Certifications & compliances

Catalog no.	NAFTA	cULus	UL	NOM 426
CSB115	•	•	•	•
CSB215	•	•	•	•
CSB315	•	•	•	•
CSB415		•	•	•
CSB120	•	•	•	•
CSB220	•	•	•	•
CS320	•	•	•	•
CSB420		•	•	•
CS115	•	•	•	•
CS215	•	•	•	•
CS315	•	•	•	•
CS415		•	•	•
CS120	•	•	•	•
CS220	•	•	•	•
CS320	•	•	•	•
CS420		•	•	•

KEY: NAFTA cULus UL NOM

Compliances, specifications and availability are subject to change without notice.

Electrical Sector
203 Cooper Circle
Peachtree City, GA 30269
United States
Eaton.com
Eaton.com/arrowhart

Electrical Sector
Canada Operations
5925 McLaughlin Road
Mississauga, Ontario, L5R 1B8
Canada
EatonCanada.ca
Eaton.com/arrowhart

Electrical Sector
Mexico Operations
Carr. Tlalnepantla -
Cuautitlán Km 17.8 s/n
Col. Villa Jardín esq.
Cerrada 8 de Mayo
Cuautitlán, México CP 54800
México
Eaton.mx
Eaton.com/arrowhart

Powering Business Worldwide

Eaton
1000 Eaton Boulevard
Cleveland, OH 44122
United States
Eaton.com

© 2017 Eaton
All Rights Reserved
Printed in USA
Publication No. TD620021EN
June 2017

Eaton is a registered trademark.

All other trademarks are property of their respective owners.